English

CY22 SmartSense

Owner's Manual

WARNING

READ THIS SUPPLEMENT AND YOUR CANNONDALE BICYCLE OWNER'S MANUAL. Both contain important safety information. Keep both for future reference.

cannondale

SAFETY MESSAGES:

In this supplement, particularly important information is presented in the following ways:

⚠ WARNING

Indicates a hazardous situation which, if not avoided, may result in death or serious injury.

NOTICE

Indicates special precautions that must be taken to avoid damage.

SYMBOLS:

N·m	Tightening torque in Newton meters.

ILLUSTRATIONS:

Throughout this manual, all product images, graphics, and figures shown are for illustration purposes only and may not be an exact representation of the product.

DOWNLOAD

Cannondale manuals/supplements at http://www.cannondale.com.

About this Manual

This manual provides important safety, use, and maintenance information. This is not a service manual.

Proper use, and installation, and service of the product is important to your safety.

Have a professional bicycle mechanic install and service SmartSense components.

Contacting Cannondale

Cannondale USA
Cycling Sports Group, Inc.
1 Cannondale Way
Wilton, CT 06897, USA
1-800-726-BIKE (2453)

CSG Europe (Woudenberg)

Cycling Sports Group Europe B.V.
Geeresteinselaan 57
3931JB Woudenberg
The Netherlands
PH: 00.31.541.200374

International Distributors

Consult our website to identify the appropriate Cannondale Dealer for your region.

Contents

Safety Information 2-5
System Overview 6-7
Operating Instructions 8-12
Front Light Foresite 350 13
Rear Lights Hindsite E85/E25 14-16
SmartSense Battery.....16-22
SmartSense Cradle 23-26
Replacement Parts..... 27-28

Your Cannondale Dealer

To make sure your bike is serviced and maintained correctly, and that you protect applicable warranties, please coordinate all service and maintenance through your Authorized Cannondale Dealer.

NOTICE

Unauthorized service, maintenance, or repair parts can result in serious damage and void your warranty.

Important Safety Information

WARNINGS

INTENDED USE: SmartSense lights are intended to be used as daytime running lights. They are intended to draw attention to you while riding and increase the chance of other cyclists, pedestrians and motorists seeing you. They are "be seen" lights, nots lights designed to illuminate the road or hazards in the road.

Because SmartSense lights are not as bright or intense, they are NOT replacements for higher intensity lights headlights intended to illuminate the road or hazards in the road.

FOR BICYCLE USE ONLY: SmartSense light are intended for use on bicycles only. Do not attach or use SmartSense lights on cars, on motorcycles, on engine-powered vehicles, or on any other machine or device.

DO USE THESE LIGHTS IN DAYLIGHT, ALL THE TIME: Even on clear sunny days motorists can fail to see a bike rider. Particularly a rider going downhill towards a motorist trying to enter a road. Or a rider riding in and out of tree shadows. Increase your odds of being seen by always using front and rear flashing strobe lights.

NO LIGHT OR RADAR SYSTEM CAN PROTECT YOU FROM INATTENTIVE MOTORISTS OR ROAD HAZARD

HIGHER RISKS RIDING AT NIGHT: The risk of an accident, particularly being struck by a motor vehicle, is much higher at night. If you choose to accept this risk, improve your odds: Always use a proper lighting system made up of a headlight and tail light, and a strobe light. Wear light-colored reflective clothing. Ride cautiously. Seek the advice of an experienced bicycle commuter at your retailer.

Read the topic "Riding at Night" in your Cannondale Bicycle Owner's Manual now for more information on the many hazards of riding at night.

YOU CAN BE SEVERELY INJURED, PARALYZED OR KILLED IN AN ACCIDENT IF YOU IGNORE THESE WARNINGS.

⚠ WARNINGS

DISTRACTED ATTENTION: Do not allow any accessories to distract your attention or to impair your ability to operate your bicycle safely. Do not stare at electronic devices (e.g.,light controls, iPhones, Android phones, lighting system, remote cameras, or cycling computers) while you are riding. Distractions will take your attention away from the important tasks of riding your bicycle.

Fully stop your bike in a safe place away from traffic before adjusting, changing modes or otherwise interacting with the App, or any other controls."

ANY LIGHTING SYSTEM CAN FAIL WITHOUT WARNING: Ride cautiously at night. Many experienced cyclists use two independent lighting systems, such as one helmet mounted, one mounted on the bicycle.

COMPATIBILITY: Compatibility of SmartSense light is strictly limited to the Garmin devices identified in this manual, and compatibility information may be revised. You should not use any device that is not compatible as defined in this manual. Any individual component failure in any part of a the system can have unexpected consequences resulting in one or more of the components failing to operate.

BICYCLE REFLECTORS: Do not remove the reflector system from your bike.

YOU CAN BE SEVERELY INJURED, PARALYZED OR KILLED IN AN ACCIDENT IF YOU IGNORE THESE WARNINGS.

⚠ WARNINGS

SITUATIONAL AWARENESS: Keep in mind that riding your bike with lights or with situational awareness devices DOES NOT guarantee your safety. Lights, strobes, flashers, even radar activated warning devices cannot guarantee your safety or others' concern for your safety. Lights cannot protect you from death or from injury resulting from cycling's many hazards. Lights can decrease risk, not eliminate it.

All lighting must be correctly positioned on the bike to provide maximum effectiveness. Do not remove the reflectors on your bike even if you have lights.

Bicycle lighting, strobes, flashers can help distinguish a bicycle from other sources of lighting in the environment but does not guarantee your safety.

ABOUT LIGHT MODES: A light "mode" characterizes the way a light illuminates. There are multiple light modes. Light modes are selected via the Cannondale App or the front light button. A mode can be brighter or less-bright, constant or blinking or flashing, and at different rates.

LOCAL, STATE, OR NATIONAL REGULATIONS: The way in which a light illuminates may be regulated in your area. It is your responsibility to make sure the lights work and used in within the limits and in accordance with all local laws Failure to observe local laws could subject you to penalties or fines.

REFLECTIVE CLOTHING & ACCESSORIES: Lighting is one way to increase your visibility to others. In addition to lighting, we strongly recommend that you consider using high-visibility clothing, and other accessories with reflective materials incorporated in the design.

YOU CAN BE SEVERELY INJURED, PARALYZED, OR KILLED IN AN ACCIDENT IF YOU IGNORE THESE WARNINGS.

Batteries & Chargers

WARNING

REPLACEMENT - Only use the battery and charger indicated in the “Specifications” section . Do not use other batteries or chargers. Do not use the charger to charge other batteries.

PREVENT DAMAGE - Do not drop the battery or charger. Do not open, disassemble, or modify the battery or charger. There are no user-serviceable parts inside.

Keep the battery out of intense sunlight and away from heat. Excessive heat will damage the battery.

Keep battery away from paper clips, coins, keys, nails, screws, or other small metal items to prevent shorting exposed battery contacts. Shorting battery contacts can cause severe burns, fire, or an explosion.

“TRANSPORTATION & SHIPPING – When planning a trip, long before flying, contact your airline and ask about regulations re batteries in checked baggage, in this case the SmartSense Li-Ion 19.4 Wh battery pack. Understand that the battery may be subject to special handling procedures. Shipping a battery may be regulated by special hazardous materials regulations. Contact your carrier. When simply storing or handling the battery off the cradle, keep it dry and do not allow any metal objects to contact the battery contacts. “

CHARGING - Bring the battery and charger indoors and allow to reach room temperature before charging. Make sure charger and A/C outlet are the same voltage.

Locate both charger and battery indoors in a clean, dry area with good ventilation to charge. Make sure the area is free from combustibles to avoid fire from sparks or from over-heating. Keep charger ventilation openings unobstructed. Do not cover the charger or the battery.

Disconnect the battery from the charger unit when fully charged. Do not leave a fully-charged battery connected to the charger. Unplug the charger from the wall outlet when not in use.

Maintain the battery and the charger as directed by the manufacturer’s instructions.

DISPOSAL- Battery and charger contain regulated materials and must be disposed/discarded in accordance with national and/or with local laws. Do not discard the battery/charger into fire, into water, or into ordinary household waste/garbage. Instead, take to a waste facility/recycler.

FAILURE TO OBSERVE THESE WARNINGS CAN RESULT IN ELECTRICAL FIRES, EXPLOSIONS, SEVERE BURNS, OR ELECTROCUTION.

System Overview

Components

Base component descriptions and basic function:

(1) SmartSense Battery (Garmin Varia Core Battery) This is the power for the SmartSense system. As a side note, you can remove the battery and use it to charge your phone at the coffee shop by using the USB-C port on the top.
(2) SmartSense Cradle (Garmin Varia Core Cradle) The brains, the control center and the mount for the battery. This is the communication hub between all the SmartSense components and also out to your phone. Think of this as your computer and SmartSense is the operating system all the components work with.
(3) SmartSense Foresite E350 front light – Features vary depending on region.
(4) SmartSense Hindsite E85 or Hindsite E25 rear lights – Features vary depending on region.
(5) Cannondale Wheel Sensor – Tells the SmartSense system when you are riding and automatically records your riding activity for you. For more information, go to: https://www.cannondale.com/-/media/files/manual-uploads/manuals/134946%20rev%201%20cd%20ii%20wheel%20sensor.pdf
Cannondale App – While the SmartSense system is fully functional without it, with the Cannondale App you can customize your light and display settings. For more information about the app, go to : https://www.cannondale.com/en-us/app

Component Locations

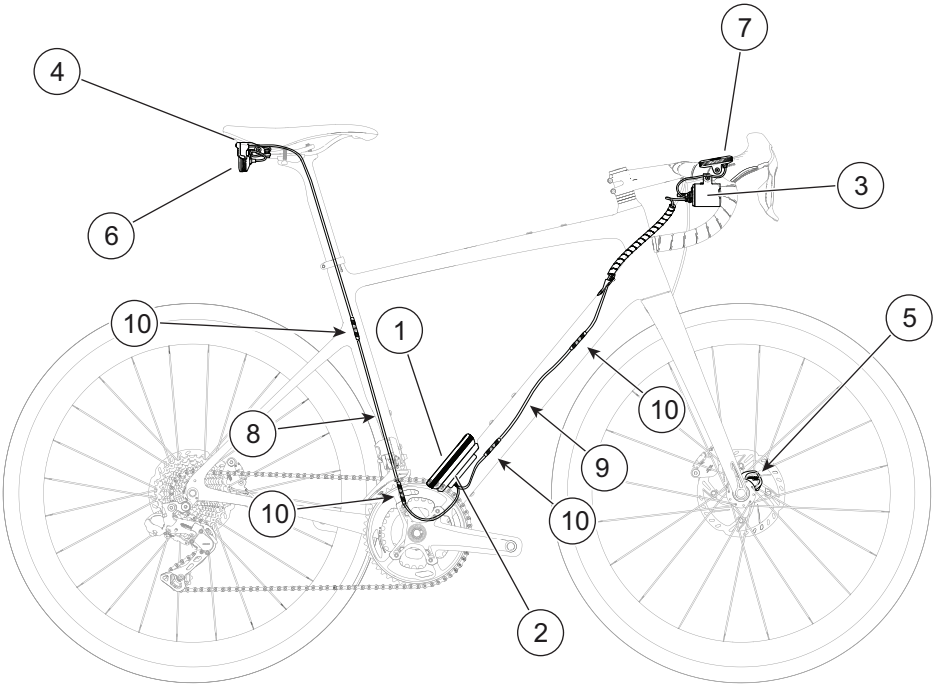

Identification

1. SmartSense Battery
2. SmartSense Cradle
3. Foresite front light
4. Hindsite rear light E85 or E25
5. Cannondale Wheel Sensor
6. Garmin Radar
7. Garmin Radar display unit
8. Extension cable, seattube
9. Extension cable, downtube
10. Cable connectors

Operating Instructions

Getting Started

When shipped as original equipment with your bike, the SmartSense system has been prepared to be ready right out of the box. This means that the system will turn on automatically when the front wheel is turned or the front light button is pressed.

The following hardware requirements must be met:

1. The wheel sensor must be properly mounted and operational on the front wheel. To test it, spin the wheel and confirm that the green LED on the sensor flashes.
2. The SmartSense battery must be fully charged and locked into the cradle.
3. The cradle must be connected via the cables to each light in the system (front/rear). The connecting cables must be properly aligned and inserted into the extension cables and to the socket of each light. Lights that fail to come on may be an indication that the connector or cables are improperly aligned or inserted.

Turning SmartSense On/Off

Automatically

- ON: Start riding, and the Cannondale Wheel Sensor will wake up the system automatically (Auto Wake feature)

  OFF: SmartSense will turn off automatically when you stop for more than six minutes

Manually

- BATTERY BUTTON: Hold the button on the battery for two seconds, or until the blue light comes on, then release
- or, CANNONDALE APP: Tap the SmartSense power button in the Cannondale app.

Lights

The SmartSense lights when correctly connected via the cable sockets will perform as following:

Manually changing light modes:

Push the button on the back of the front light to cycle through the light modes

- To maximize visibility, lights will always start in mode 1 when first powered on

Manually turning lights off/on:

Push and hold the front light button for two seconds to turn the lights on/off. Radar continues to work while the lights are turned off.

Default Light Modes and Runtime

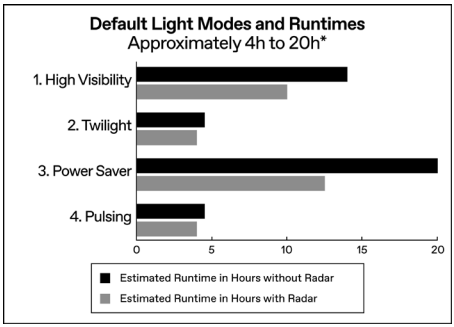

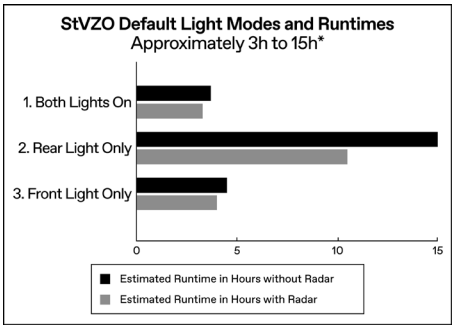

“* Various factors can cause lower runtimes including: use of Auto Adjust / Auto On mode, battery health and temperature conditions. Runtimes are based on continuous use and will be reduced by time spent in Sleep mode.”

What is ‘StVZO’?

In some European regions SmartSense comes with StVZO-compliant lights. StVZO regulations restrict how lights may appear (for example, blinking or flashing patterns are prohibited).

SmartSense StVZO systems are labeled with “K 1906” on the side of the front light.

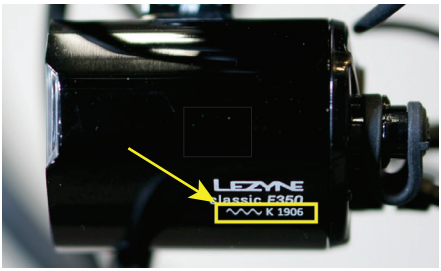

Figure. StVZO Light Marking

SmartSense standard systems are labeled with “Classic E350” on the side of the front light.

Figure. Standard Light Marking

Radar

Some SmartSense models are equipped with an integrated Garmin Varia Radar system including a rear facing sensor and a handlebar mounted display unit. For these parts, each component must be properly connected to to the lights at the light sockets.

There are three ways to receive Radar alerts when the system is installed:

1. Radar Display Unit on handlebar

   LED display with audio alerts, included on bikes equipped with Radar

   Status LED at the top and multiple white LEDs show approaching vehicles

2. Cannondale App Ride Screen

   Use the Cannondale app and press Start Ride

   Approaching vehicles will appear on Ride screen and audio alerts will sound

3. Paired with some bike computer head units or watches/wearables (Garmin, Wahoo, Hammerhead, etc.)

Radar alert colors:

- Green = No vehicle is detected
- Amber = Vehicle is approaching from behind
- Red = Vehicle is approaching at a high rate of speed
- Red (when no vehicles are approaching) = Device error

SmartSense Features and Settings

- Auto Wake: SmartSense will turn on when the Wheel Sensor detects motion. It will turn off automatically when you stop for more than six minutes. SmartSense can always be turned on/off using the app, or the button on the battery. (On by default)
- Auto Adjust in Low Light (StVZO = Auto On in Low Light): In low light conditions, lights will change to maximize your visibility to drivers. When brighter conditions return or you change the light mode, lights will return to your selected mode. The ambient light sensor is located on the back face of the front light. In some cases, this setting may increase battery drain significantly. (On by default)
- Auto Low Power Mode: To extend range, lights will change at 10% battery and radar will turn off at 5%. (On by default)
- Brake Alert: Rear light will react to rapid deceleration, warning people behind you. (On by default)
- React to Radar Targets: Lights will react to cars approaching from behind, to make you more visible. (On by default, if Radar equipped)
- Auto Proximity Flash: Lights will flash briefly when you open the app near your SmartSense. (Requires app)
- Radar audio & visual display options (Requires app)
- USB power bank: Battery can be used to charge other USB devices (phone, head unit, etc.), but not while riding.

* All features and settings can be customized in the Cannondale App

Using SmartSense with the Cannondale App

When you add your SmartSense bike to the free Cannondale App (iOS or Android), you will have more ways to control and customize SmartSense, including:

- Customize SmartSense features and settings
- Power SmartSense on/off
- Customize and control SmartSense light patterns (not applicable on StVZO systems)
- Precise battery level indicator
- Receive Radar alerts on your phone
- Upgrade firmware (when necessary)

Troubleshooting

If you encounter problems using the SmartSense system, the Cannondale Help Center maintains a series of articles focused on individual conditions that may arise. Examples of current articles:

- **Getting started with SmartSense**
- **SmartSense troubleshooting**
- **SmartSense features do not appear in the Cannondale App**
- **Cannondale App does not connect to SmartSense**
- **Auto Wake feature does not work**
- **SmartSense Radar does not work**
- **How to use SmartSense Radar with your head unit**

You can find these articles online here:

https://cannondale.zendesk.com/

SmartSense Foresite 350

Identification

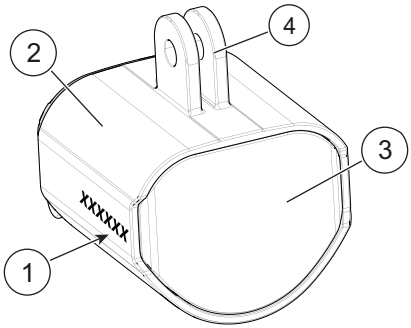

“Make sure to rotate the connector to align the pins before inserting fully

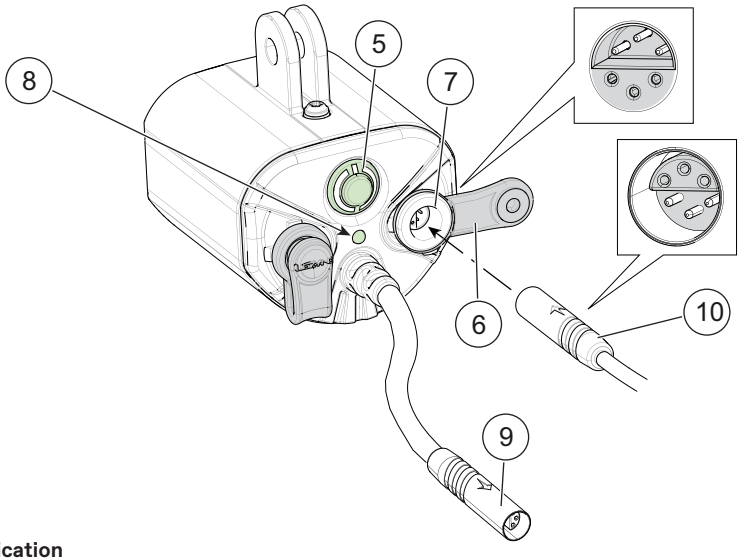

Identification

1. Model name
2. Light body
3. Lens
4. Light mount
5. Light mode button
6 Port cover (2X)
7. Accessory port (2X)
8. Ambient light sensor
9. Power and communication cable (to cradle)
10. SmartSense accessory connector (from another device)

Hindsite Array E85/E25 Rear Lights

Identification

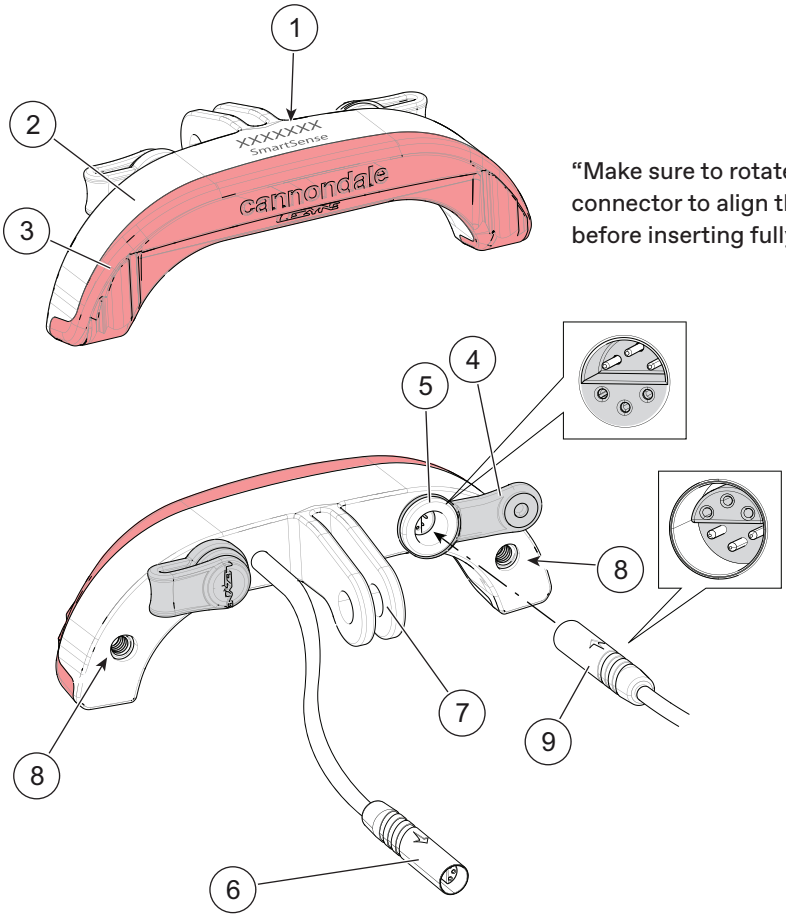

"Make sure to rotate the connector to align the pins before inserting fully

Identification

1. Model name
2. Light housing
3. Lens
4. Port cover (2X)
5. Accessory port (2X)
6. Power and communication cable (to cradle)
7. Light mount
8. Radar bracket threaded insert (2X)
9. SmartSense accessory connector (from another device)

Mounting Bracket/Garmin Varia Radar Unit

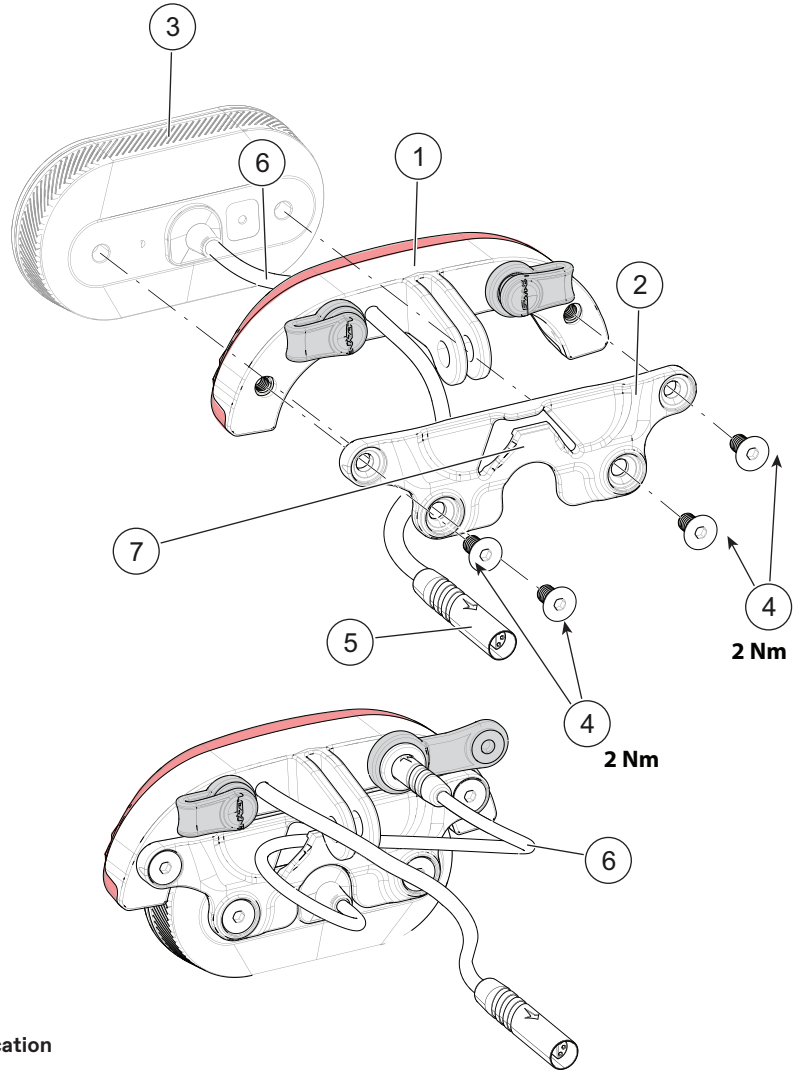

Identification

1. Hindsite light
2. Radar mounting bracket
3. Garmin Varia Radar
4. Radar mounting bracket screws (4X)
5. Power and communication cable (to cradle)
6. Garmin Varia Radar cable
7. Radar mounting bracket cable hook

SAVE or C2 Light-Mount Post

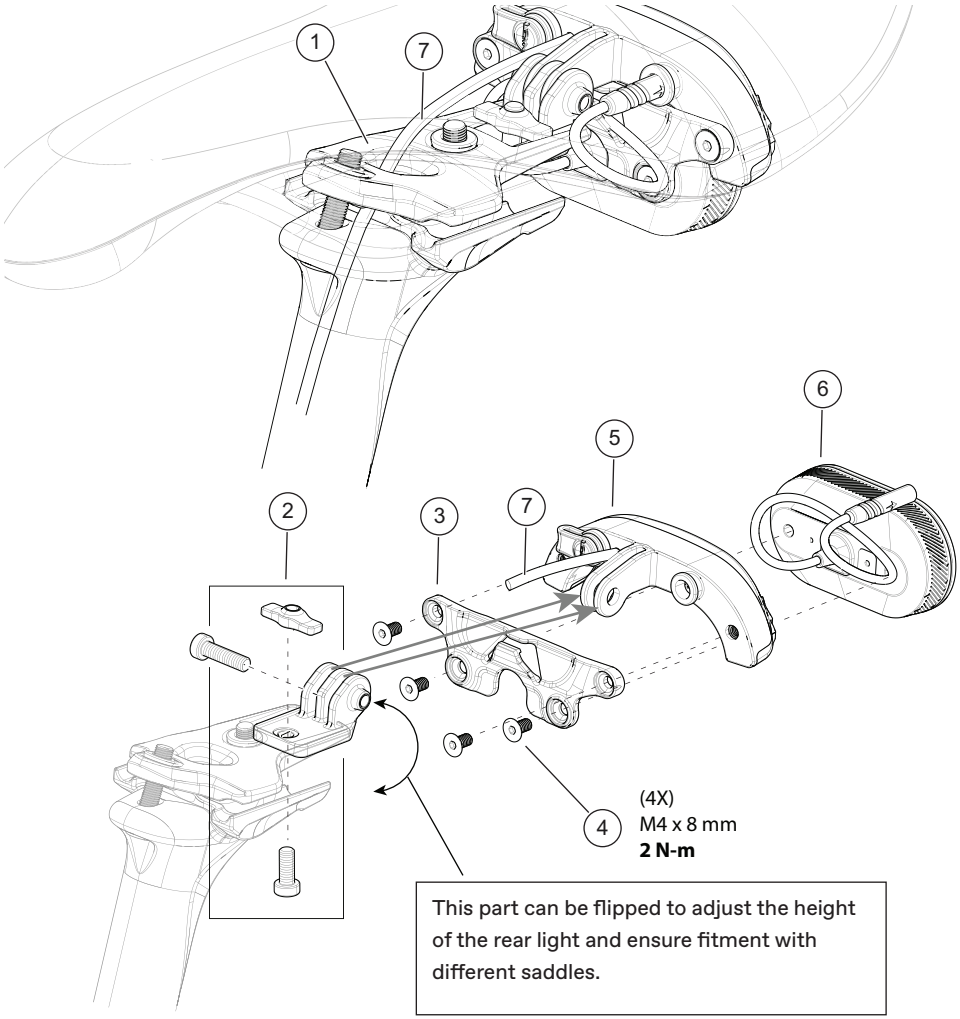

Identification

1. Upper saddle rail clamp
2. Friction flange hardware
3. Hindsite light with Garmin Varia Radar
4. Hindsite light
5. Power and communcation cable (to cradle)
6. Radar unit
7. Rear light cable

SmartSense Battery

Specifications

Model : Garmin Varia Core Battery
Part No.: CP1552U10OS
Intended Use: Bicycle use only.
Capacity: 19.4 Wh, 2810mAh, 7.2 VDC
Charge time: 3 Hours
Charger: 5V 2A USB wall charger

General Information

The battery supplies power and data connection to other attached SmartSense components via the extension cables.

The battery must be fully charged and installed into the SmartSense cradle or rail frame mount in order for SmartSense system components to operate.

NOTICE

The battery is a sealed unit and cannot be serviced.

Replace the battery if it fails to charge normally, damaged or otherwise faulty

Dispose and or recycle electronic waste in accordance with your local regulations.

SmartSense Battery Duration and Service Life

The duration the battery is able to supply to the system attached SmartSense components depends power demands of lighting and other connected components.

- Bright lights, not flashing, flashing quickly - need more energy, battery life shorter, less operating time.
- Light less bright, and flashing slowly. This will use the battery less and result in longer operating time.

The battery service-life is limited. Overall lifespan will be affected by the number of charge and discharge cycles and environmental factors.

SmartSense Battery Initial Charge

Before first use, charge the battery for 3 hours to full capacity.

Identification

TOP VIEW

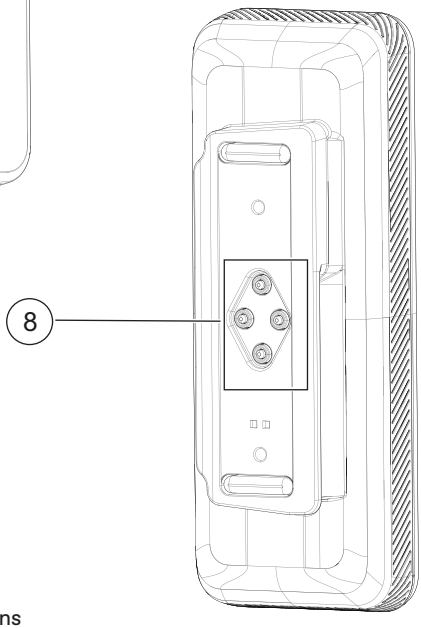

BOTTOM VIEW

Identification

1. Battery
2. Battery button
3. LED lights
4. Status LED
5. USB connector cover
6. USB-C socket
7. USB-C connector
8. Battery-to-cradle contact pins

LEDS

The four LEDs (3) located under the battery button (2) indicate the current battery charge level. Press the battery button (2) momentarily and the LEDs will light up green for 3 seconds, to indicate the battery charge level.

The charge level is defined as:

- 4 green LEDS - 100% charge
- 3 green LEDS - 75% charge
- 2 green LEDS - 50% charge
- 1 green LED - 25% charge

Status LED

The Status LED (8) is the top LED closest to the battery button .

When the SmartSense system is turned on, the status LED will operate in the following manner:

- Active = Two blue flashes every 5
- Sleep = One blue flash every 10 seconds
- seconds
- Battery level low = Two red flashes every 5 seconds
- System Error = solid red
- Firmware transferring = blue flashing
- Firmware updating = purple solid, purple flashing
- Firmware installed successfully = 10 blue flashes
- Firmware update failed = 10 red flashes

Sleep Modes

The battery has two different sleep modes which automatically conserve energy when the system is not in use.

Sleep mode

If no activity is sensed after 6 minutes, the battery will enter "sleep mode."

Sleep mode temporarily shuts of power to devices.

The battery will auto-wake from sleep mode when:

- The battery button is pressed for two seconds or,
- Motion is detected by wheel sensor, or
- SmartSense is turned on via the Cannondale App.

Deep Sleep Mode

The battery will enter the deep sleep mode after 2-weeks of inactivity.

While deep sleep mode:

- The battery conserves energy.
- The battery status LED will not blink, making the battery to be without power.
- The battery will not respond to the wheel sensor
- The battery will not respond to the Cannondale App.
- The battery will not repsond to a momentary press of the button.

To turn the battery back on if it is in deep sleep mode:

Press and hold the battery button for four seconds.

To place the battery in deep sleep mode manually:

Press and hold the battery button for four seconds.

SPECIAL NOTE:

The battery must have a sufficient charge to exit deep sleep mode. If the following does not result in the battery returning to its awake state, charge the battery.

Charging

See also, „Batteries & Chargers“ on page 5.

1. Remove the SmartSense battery from the bicycle bicycle.
2. Lift the battery port cover (4) and connect a USB-C cable (6) to the port (5).
3. Connect the cable to a 5V 2A (minimum) USB power supply (wall charger) and charge the battery approx. 3 hours.
4. When the battery is fully charged, the green LEDs will turn off. Momentarily press the battery button (2) to confirm a full charge with all four LEDs lighting green.
5. Disconnect the cable (6) from the from the battery charge port (5) and replace the port cover (4).

NOTICE

Remove the battery to charge it.

SPECIAL NOTE: The follow can occur:

If the battery is fully depleted, and charged, the LEDs may not light again normally until the charged battery is placed back into the cradle and battery turned on again.

Charging other Devices

The SmartSense Battery may be used to transfer energy (charge) other smaller, lesser battery capacity batteries of USB devices. It can serve as a powerbank; this is not its primary purpose.

Charging another device will drain the charge level of the SmartSense Battery. Subsequently, the remaining running time of the SmartSense system components will be reduced.

Be sure to consider, the resulting drain of your SmartSense Battery BEFORE choosing to use the SmartSense Battery to supply a charge to other devices.

WARNING

Do not charge other devices while riding or with the battery in the cradle.

Always check the current charge level SmartSense battery after charging another device.

USB-C Port

The USB-C port on the SmartSense battery is for charging and supply charge to lesser capacity devices.

The port does not transmit or receive data.

System updates are communicated only from the Cannondale App, and only between paired devices.

It is only for charging the battery or charging a relatively smaller capacity battery with a USB connector such as a phone or cycling computer.

NOTICE

Remove the battery to charge it.

Remove the battery to charge other devices with it.

Information is not provided in this manual for firmware updates to SmartSense components.

SmartSense Cradle

Information

The SmartSense Battery Cradle (1) retains the SmartSense Battery (2) on the bicycle frame.

The cradle (1) has two cable connectors for connecting SmartSense compatible components mounted on the bicycle.

The cables exiting the cradle are identical in function and not specific to any particular component. When attaching the extension cables t s, it is best however to use the upper cable for the front components and the lower cable for the rear-mounted devices.

The connector end should be aligned with the arrows and pressed firmly together.

Serial Number

The serial number (3) is embossed into the cradle housing.

Use this number when the need arises to know relevant SmartSense system service information.

Frame Installation

The cradle should remain in place on the bicycle at all times when SmartSense devices are installed.

If it is necessary, remove the two mounting screws to remove the cradle from the frame in order to connect and/or disconnect the two internal extension cables. It is not possible to service these cables with the cradle in place.

Secure the cover or cradle with the cover screws. Use a torque wrench to tighten as indicated.

If the SmartSense cradle is removed, the frame opening cover (10) should be installed.

Identifcation

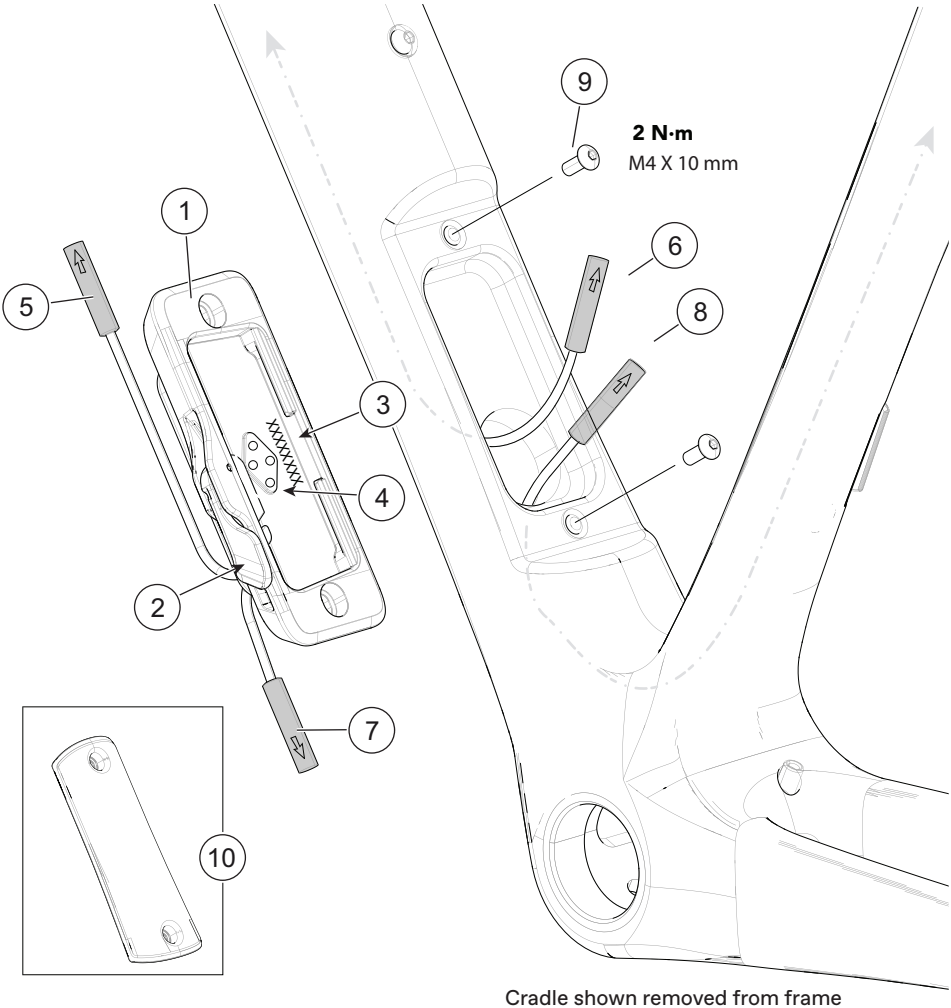

Cradle shown removed from frame for clarity.

Identification

1. SmartSense Cradle
2. Cradle latch
3. Cradle Serial/ID number
4. Cradle contact pins
5. Cradle cable lead, upper
6. Extension cable, 500mm, downtube
7. Cradle cable lead, lower
8. Extension cable. 700mm, seatube
9. Mounting screws (2X)

Battery Installation

1. Open the cradle latch (3).
2. Lower right battery edge into right side of cradle (1); lower the left edge of battery (2) into the cradle.
3. Close the cradle latch (3). Press firmly to confirm that it is closed.

⚠ WARNING

Always close the cradle latch securely to prevent battery damage, disconnection or loss, component power loss, or cradle/latch damage.

Battery Removal

1. Open the cradle latch (3).
2. Tilt up the left edge and then pull to the left and lift out the battery (2).
3. Close the cradle latch (3) to prevent damage to it.

NOTICE

Its possible to ride without the battery in the cradle. However, there will be NO POWER supplied to SmartSense components and they will not function. You will be choosing to ride without use of them.

It is best to always return a fully-charged battery the cradle and securely latch it, so you are ready to ride.

You can avoid dirt or grime collecting in the cradle by keeping a fully charged battery in place.

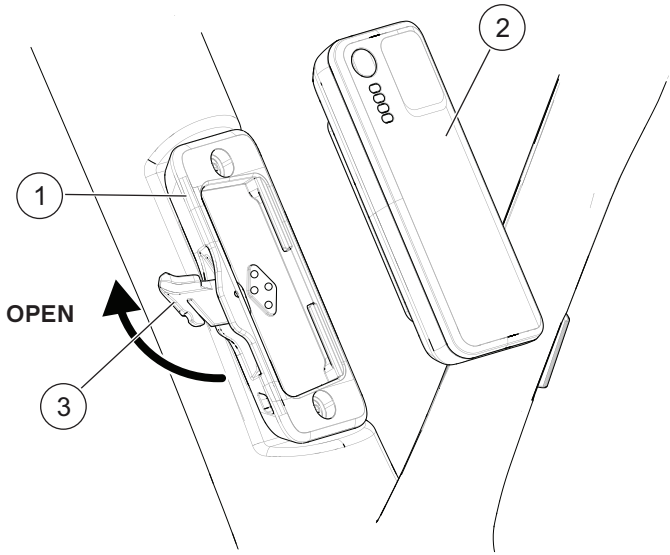

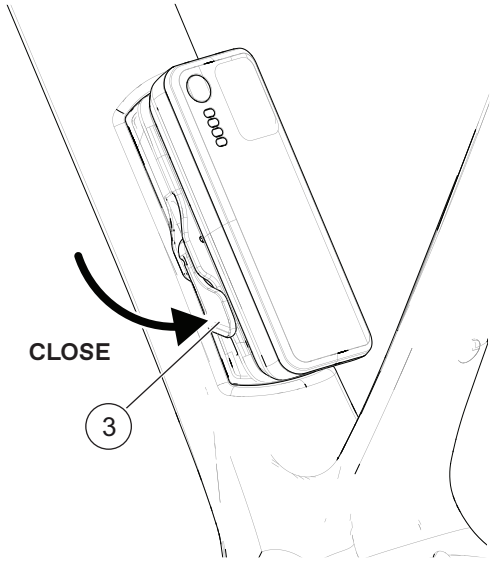

Identification

1. SmartSense Cradle
2. SmartSense Battery
3. Cradle latch

Replacement Parts

SmartSense Parts List

The following SmartSense components are available as replacement or service parts:

ID	Part Number	Description
L	K76641	Hindsite Array Radar Connection Bracket
--	K76661	Radar Display and Center Light Mount
P	CP2502U10OS	SmartSense Wire Kit 500/700mm
Q	K26032	Light mount seatpost friction flange
V	CP1202U10OS	Light Centered Round Bar Mount
W	CP1212U10OS	Radar Display Round Bar Mount
X	CP1222U10OS	SystemBar Radar Display Mount
Y	CP1232U10OS	SystemBar Computer Mount
Z	CP1512U10OS	Garmin Varia eRVR315 WW Radar
AA	CP1522U10OS	Garmin Varia eRDU WW
BB	CP1532U10OS	Garmin Varia Core Cradle
CC	CP1552U10OS	Garmin Varia Core Battery
DD	CP1662U10OS	Foresite E350 SmartSense Light
	CP1642U10OS	Foresite E350 SmartSense STVZO Light (German safety standard compliant)
EE	CP1672U10OS	Hindsite Array E85 SmartSense Light
	CP1652U10OS	Hindsite Array E25 SmartSense STVZO Light (German safety standard compliant)

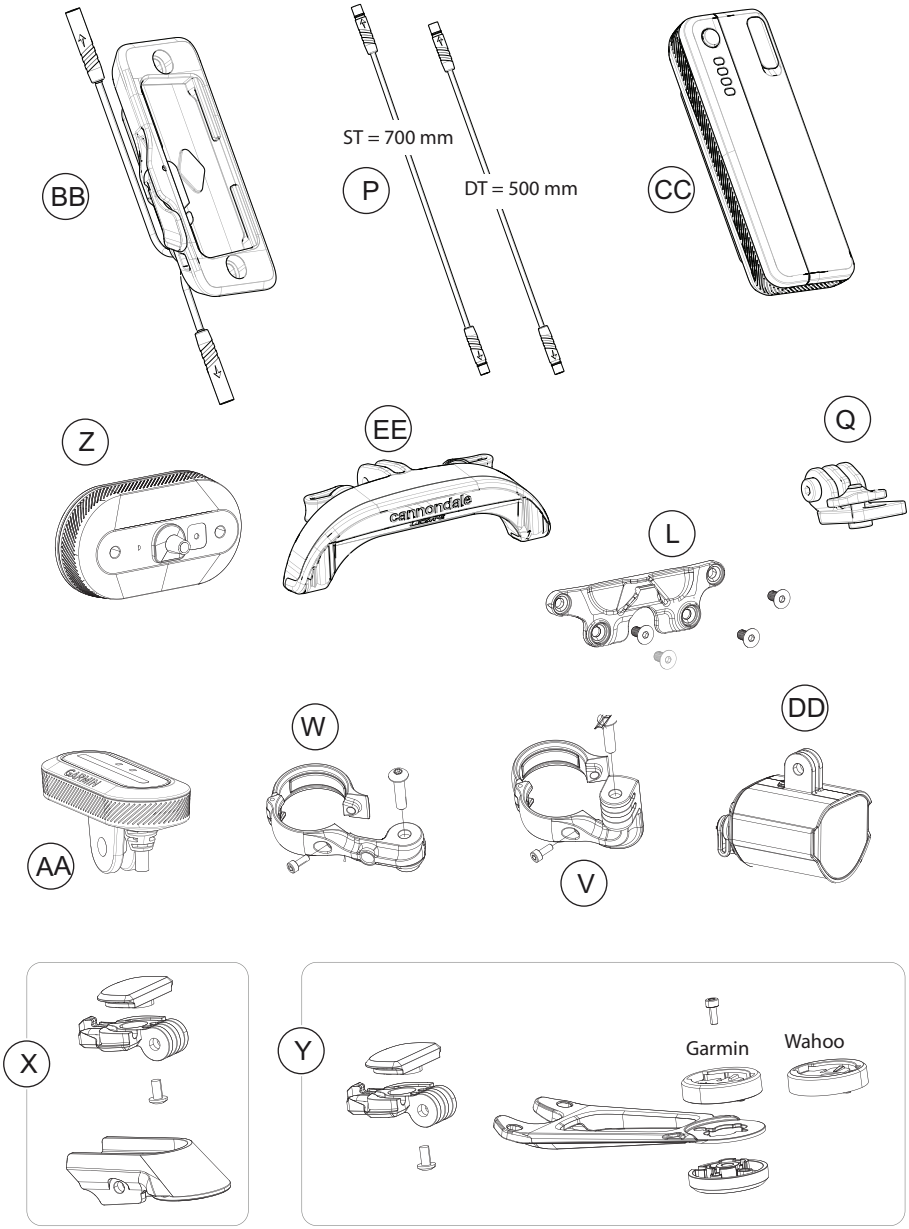
BB
ST = 700 mm
P
DT = 500 mm
CC
Z
EE
cannondale
Q
L
AA
W
V
DD
X
Y
Garmin
Wahoo

www.cannondale.com
© 2022 Cycling Sports Group
CY22 SmartSense Owner's Manual
138691 Rev 1 (02/22)

CANNONDALE USA
Cycling Sports Group, Inc.
1 Cannondale Way,
Wilton CT, 06897, USA
1-800-726-BIKE (2453)
www.cannondale.com

CSG EUROPE
Cycling Sports Group Europe B.V.
Geeresteinselaan 57
3931JB Woudenberg
The Netherlands
service@cyclingsportsgroup.com

CANNONDALE UK
Cycling Sports Group
Vantage Way, The Fulcrum,
Poole, Dorset, BH12 4NU
+44 (0)1202732288
sales@cyclingsportsgroup.co.uk